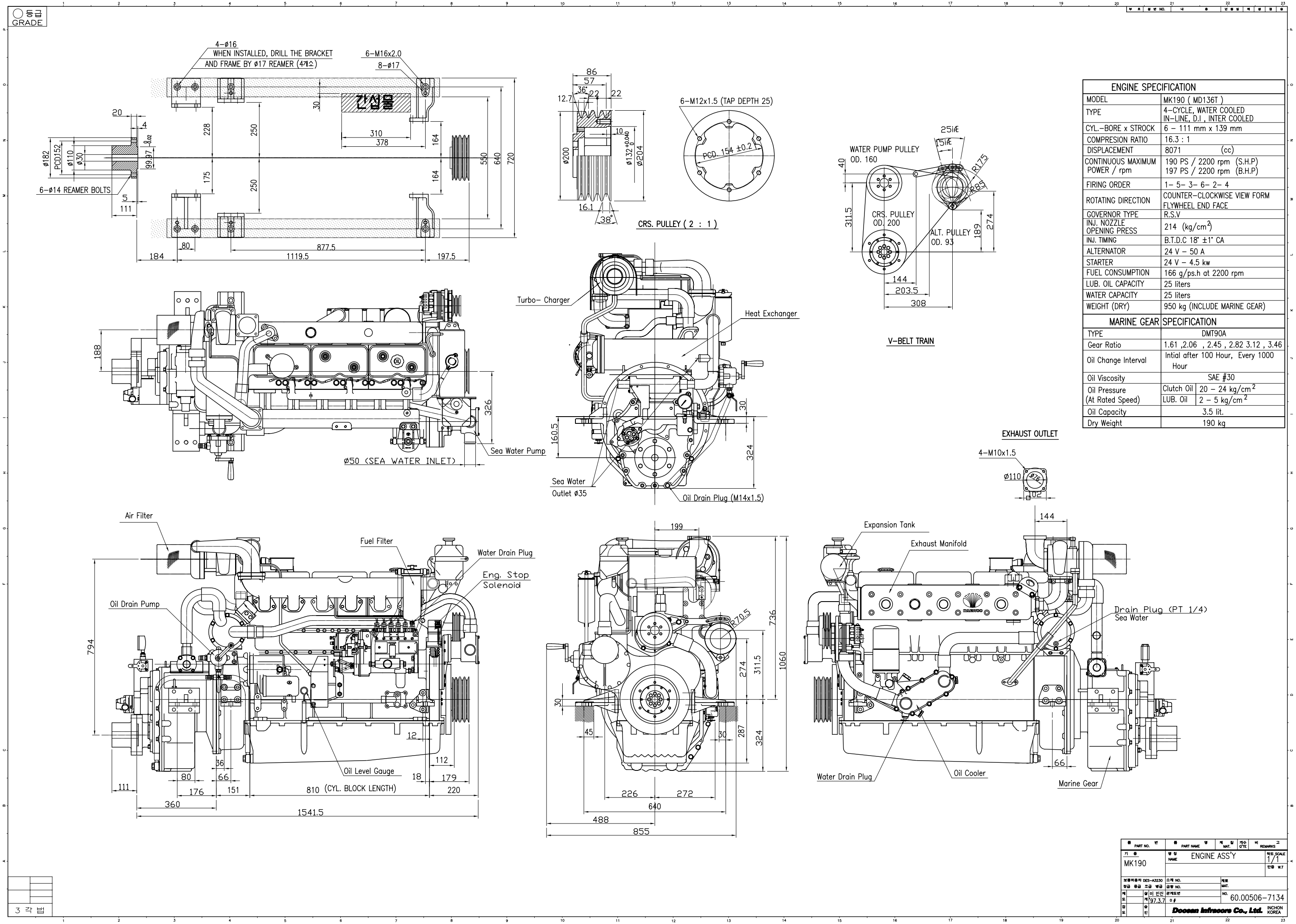

ENGINE SPECIFICATION	
MODEL	MK190 (MD136T)
TYPE	4-CYCLE, WATER COOLED IN-LINE, D.I , INTER COOLED
CYL.-BORE x STROCK	6 - 111 mm x 139 mm
COMPRESION RATIO	16.3 : 1
DISPLACEMENT	8071 (cc)
CONTINUOUS MAXIMUM POWER / rpm	190 PS / 2200 rpm (S.H.P) 197 PS / 2200 rpm (B.H.P)
FIRING ORDER	1- 5- 3- 6- 2- 4
ROTATING DIRECTION	COUNTER-CLOCKWISE VIEW FORM FLYWHEEL END FACE
GOVERNOR TYPE	R.S.V
INJ. NOZZLE OPENING PRESS	214 (kg/cm^2)
INJ. TIMING	B.T.D.C 18° ±1° CA
ALTERNATOR	24 V - 50 A
STARTER	24 V - 4.5 kw
FUEL CONSUMPTION	166 g/ps.h at 2200 rpm
LUB. OIL CAPACITY	25 liters
WATER CAPACITY	25 liters
WEIGHT (DRY)	950 kg (INCLUDE MARINE GEAR)

MARINE GEAR	SPECIFICATION	
TYPE	DMT90A	
Gear Ratio	1.61 ,2.06 , 2.45 , 2.82 3.12 , 3.46	
Oil Change Interval	Intial after 100 Hour, Every 1000 Hour	
Oil Viscosity	SAE #30	
Oil Pressure (At Rated Speed)	Clutch Oil	20 - 24 kg/cm^2
	LUB. Oil	2 - 5 kg/cm^2
Oil Capacity	3.5 lit.	
Dry Weight	190 kg	

품 PART NO. 번	품 PART NAME 명	재 질 MAT. / 개수 Q'TE / 비 REMARKS 고
기 종 MK190	명 칭 NAME ENGINE ASS'Y	척도 SCALE 1/1 / 단중 W.T
보통허용차 DES-A3230 / 항금 중금 조금 방금	소재 NO. / 금형 NO.	재료 MAT.
제도 / 설계 / 이 인신 / 개 97.3.7	관계도번 0 #	NO. 60.00506-7134
검토 / 승인	Doosan Infracore Co., Ltd. INCHON KOREA	