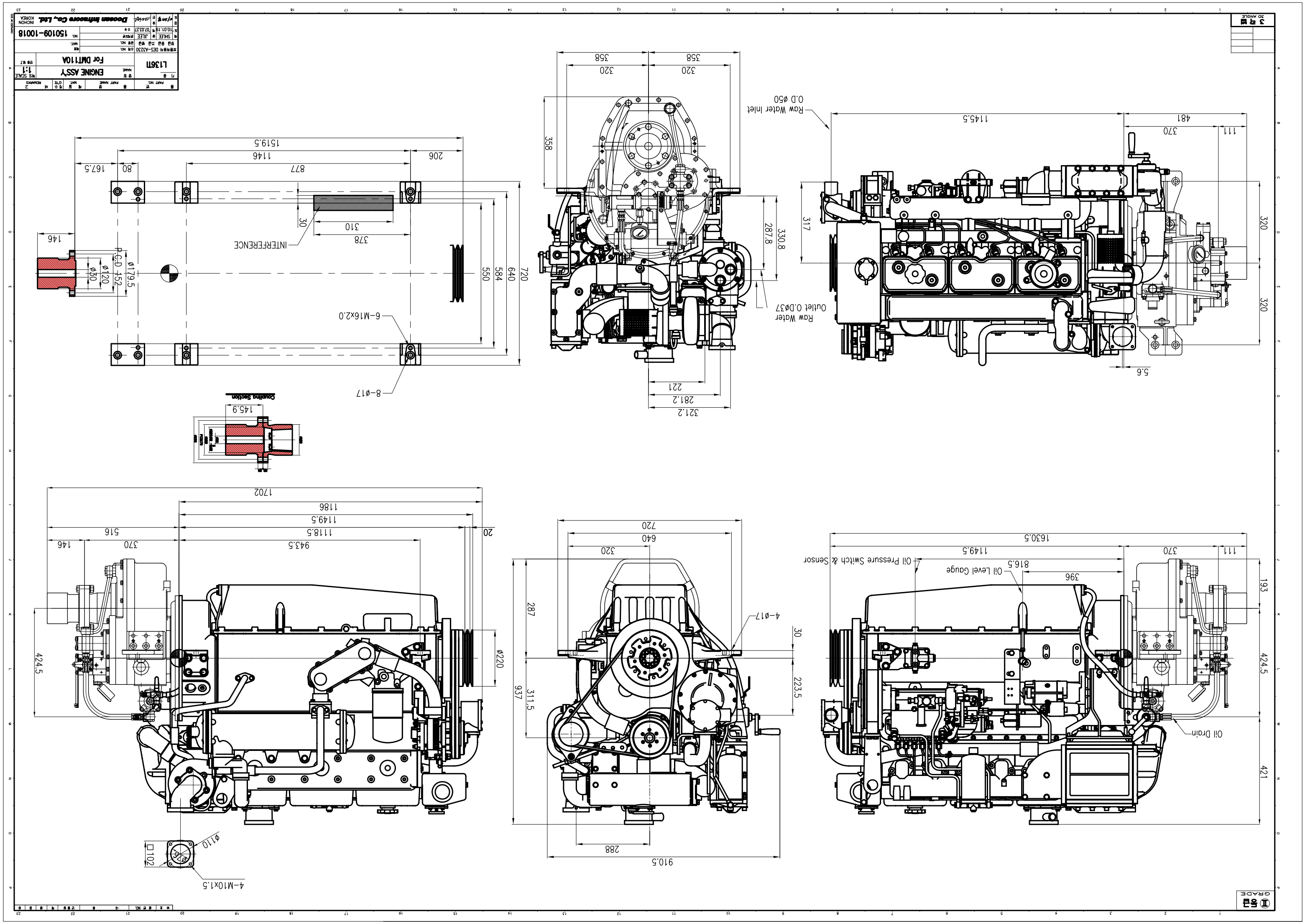

Doosan Infracore Co., Ltd.
INCHON KOREA
150109-10018
ENGINE ASS'Y
For DMT110A
L136TI
INTERFERENCE
6-M16x2.0
8-ø17
Coupling Section
Raw Water Inlet O.D ø50
Raw Water Outlet O.Dø37
Oil Pressure Switch & Sensor
Oil Level Gauge
Oil Drain
4-ø17
4-M10x1.5