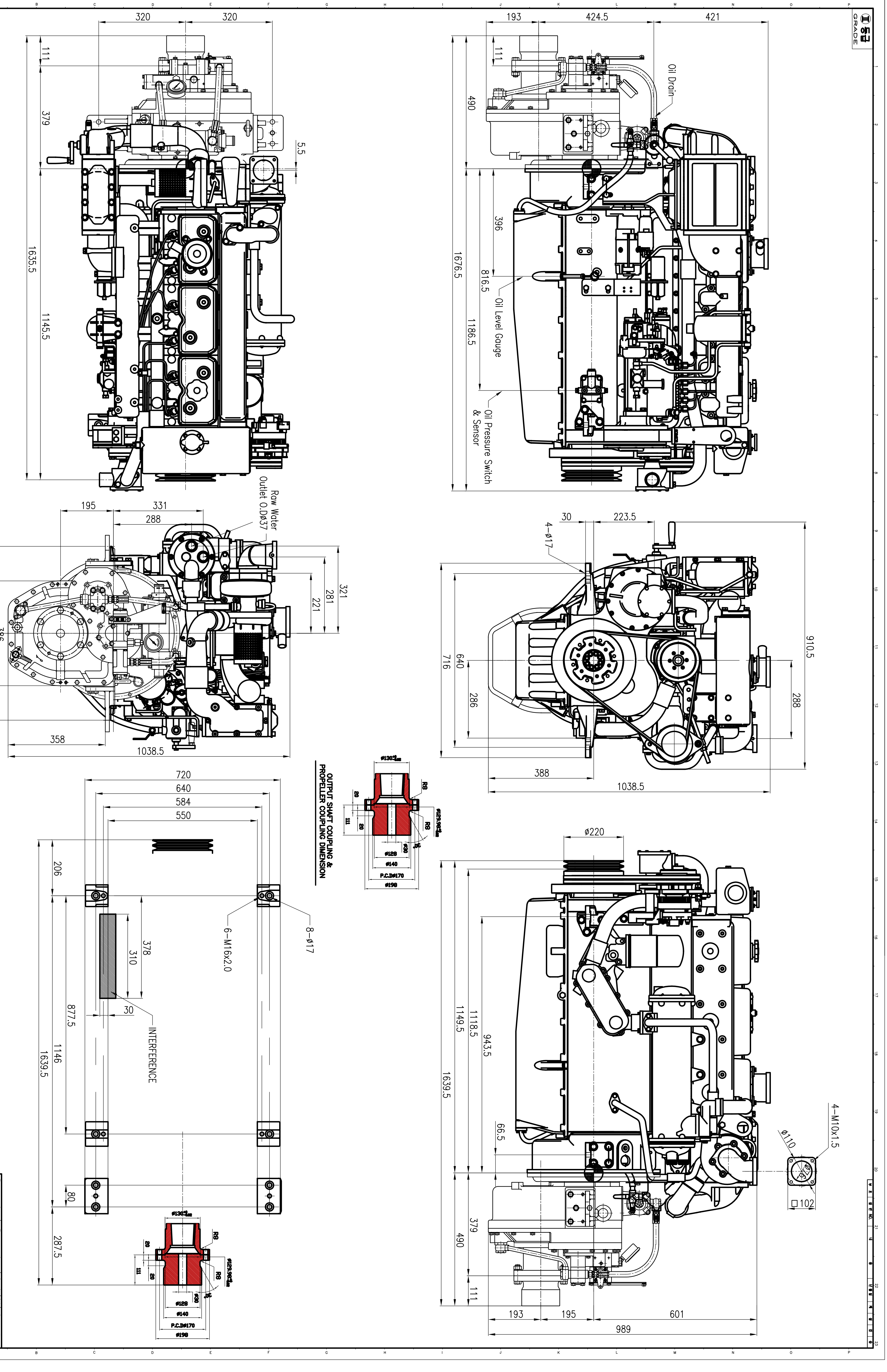

PART NO.	L136TI
PART NAME	ENGINE ASS'Y For DMT136H
SCALE	1:1
단위	W.T
	DES-A3230
	JILEE '07.03.27
NO.	150109-10017

Doosan Infracore Co., Ltd. INCHON KOREA

SIZE A0 (1189x841)