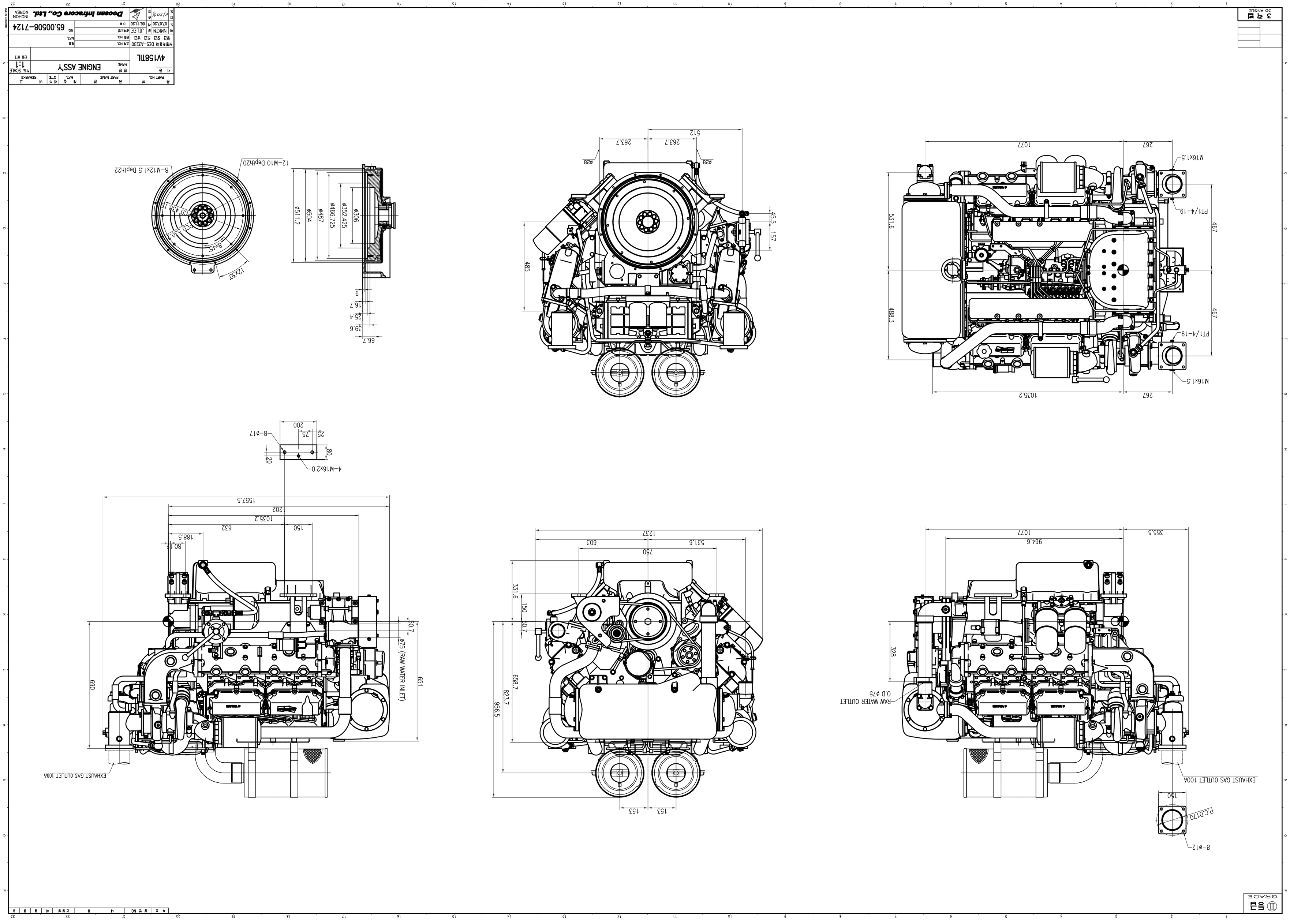

ENGINE ASS'Y
4V158TIL
65.00508-7124
Doosan Infracore Co., Ltd.
INCHON KOREA
12-M10 Depth20
8-M12x1.5 Depth22
4-M16x2.0
8-ø17
ø75 (RAW WATER INLET)
EXHAUST GAS OUTLET 100A
RAW WATER OUTLET O.D ø75
P.C.D170
8-ø12
M16x1.5
PT1/4-19