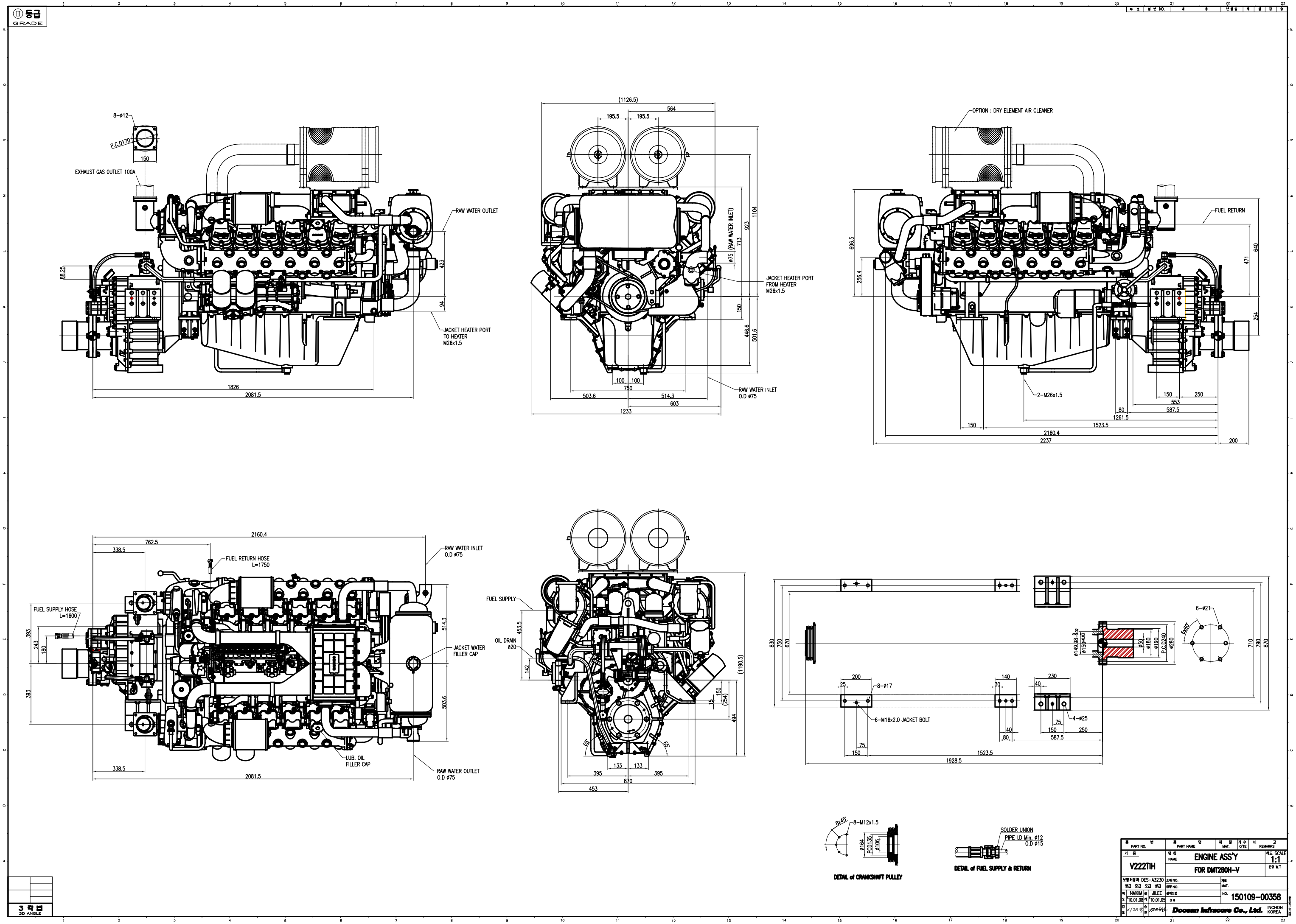

GRADE
8-ø12
P.C.D170
150
EXHAUST GAS OUTLET 100A
RAW WATER OUTLET
JACKET HEATER PORT TO HEATER M26x1.5
88.25
423
94
1826
2081.5
(1126.5)
564
195.5
195.5
ø75 (RAW WATER INLET)
713
923
1104
JACKET HEATER PORT FROM HEATER M26x1.5
150
446.6
501.6
100
100
750
503.6
514.3
603
1233
RAW WATER INLET O.D ø75
OPTION : DRY ELEMENT AIR CLEANER
FUEL RETURN
696.5
256.4
471
640
254
2-M26x1.5
150
250
553
80
587.5
1261.5
150
1523.5
2160.4
2237
200
2160.4
762.5
338.5
FUEL RETURN HOSE L=1750
RAW WATER INLET O.D ø75
FUEL SUPPLY HOSE L=1600
393
243
180
393
514.3
JACKET WATER FILLER CAP
503.6
LUB. OIL FILLER CAP
RAW WATER OUTLET O.D ø75
338.5
2081.5
FUEL SUPPLY
453.5
OIL DRAIN ø20
142
(1190.5)
15
150
(254)
494
65°
65°
133
133
395
395
870
453
830
750
670
6-ø21
6x60°
ø149.98-0.02
ø150+0.03
ø50
ø180
ø190
P.C.D240
ø280
710
790
870
200
25
8-ø17
140
30
230
40
6-M16x2.0 JACKET BOLT
4-ø25
75
150
250
40
80
587.5
75
150
1523.5
1928.5
8x45°
8-M12x1.5
ø164
PCD135
ø106
DETAIL of CRANKSHAFT PULLEY
SOLDER UNION
PIPE I.D Min. ø12
O.D ø15
DETAIL of FUEL SUPPLY & RETURN
PART NO.
PART NAME
MAT.
Q'TE
REMARKS
V222TIH
ENGINE ASS'Y
FOR DMT280H-V
SCALE 1:1
W.T
DES-A3230
NMKIM
JILEE
10.01.08
10.01.05
150109-00358
Doosan Infracore Co., Ltd.
INCHON KOREA
3 각 법
3D ANGLE