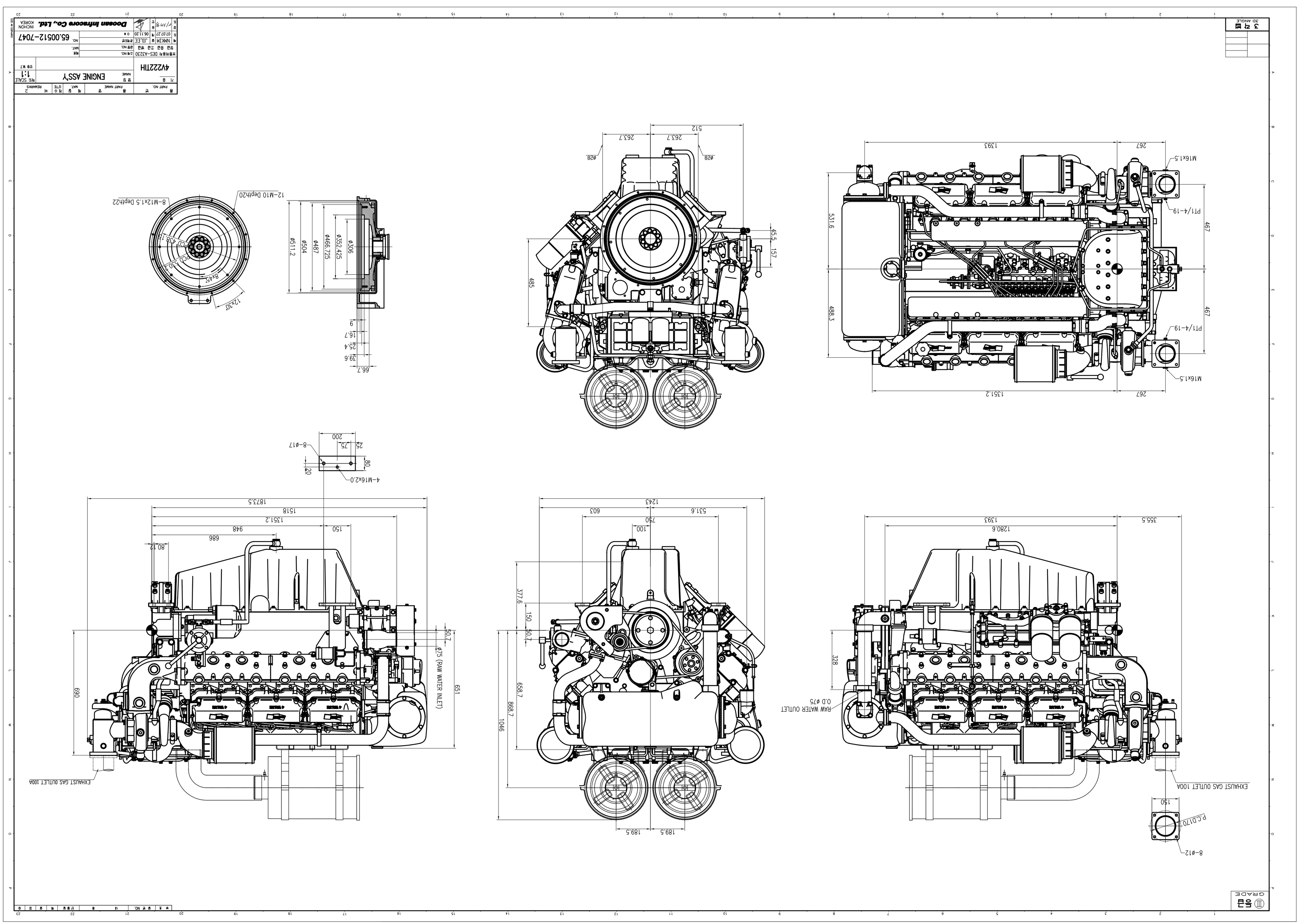

3 각 법
3D ANGLE
ENGINE ASS'Y
4V222TIH
1:1
65.00512-7047
Doosan Infracore Co., Ltd.
INCHON KOREA
12-M10 Depth20
8-M12x1.5 Depth22
PCD 438.15
PCD 530.2
8x45°
12x30°
ø511.2
ø504
ø487
ø466.725
ø352.425
ø306
9
16.7
25.4
39.6
66.7
ø28
263.7
512
45.5
157
485
1393
267
M16x1.5
PT1/4-19
467
531.6
488.3
1351.2
8-ø17
200
75
25
80
20
4-M16x2.0
1873.5
1518
1351.2
948
686
150
80.12
50.7
ø75 (RAW WATER INLET)
651
690
EXHAUST GAS OUTLET 100A
1243
603
531.6
750
100
377.6
658.7
868.7
1046
189.5
1280.6
355.5
328
RAW WATER OUTLET
O.D ø75
P.C.D170
8-ø12
GRADE